TANDBERG Intern MXP Edge Install Kit

1

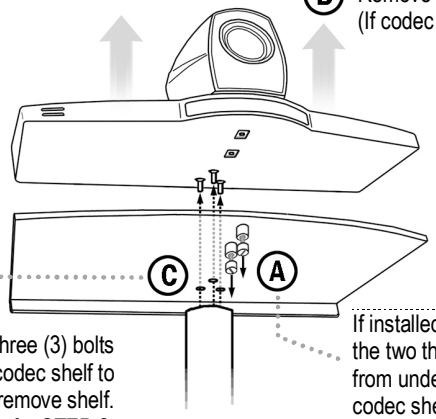

B Remove the codec. (If codec is installed.)

Unscrew the three (3) bolts that hold the codec shelf to the pole and remove shelf. Set bolts aside for STEP 2.

If installed, unscrew the two thumbscrews from underneath the codec shelf to remove the codec.

2

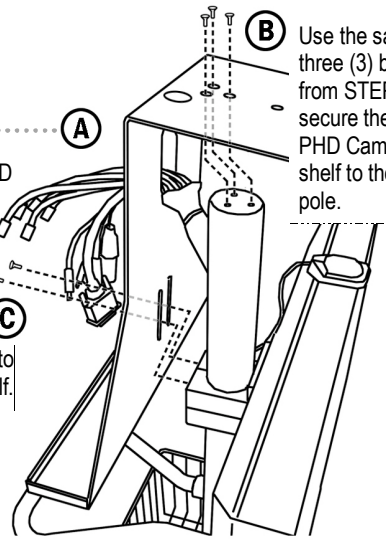

B Use the same three (3) bolts from STEP 1 to secure the new PHD Camera shelf to the pole.

Place the Precision HD Camera shelf into position as shown. Be sure to feed the cables through the hole.

Use two (2) screws to stabilize the new shelf.

3

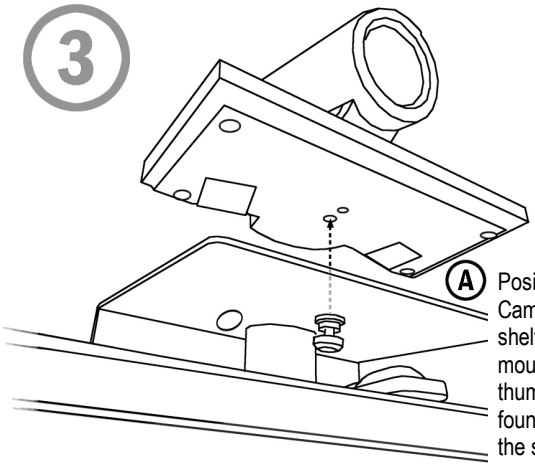

A Position the PHD Camera onto the shelf and securely mount it with thumbscrew (1) found underneath the shelf.

4

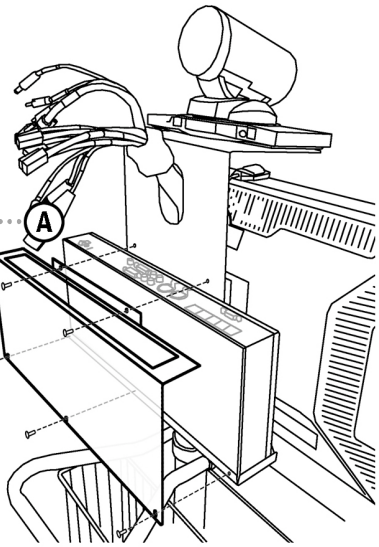

Remove the stand on the Edge codec and place the Edge onto the shelf with the I/O facing up (be sure that the power switch is on the left –hand side when facing the back of the system).

Secure the Edge codec to the system with the Edge cover plate with five (5) screws.

5

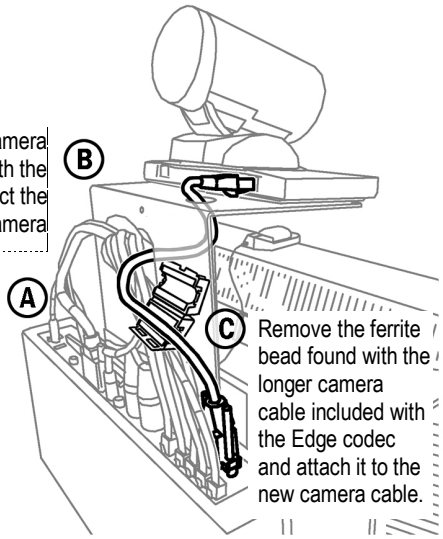

Use the shorter camera cable included with the upgrade kit to connect the codec and camera

Connect the cables as labeled. Replace/use the short cable for camera connection by feeding it through the cable egress and up the small hole on the shelf platform.

Remove the ferrite bead found with the longer camera cable included with the Edge codec and attach it to the new camera cable.

6

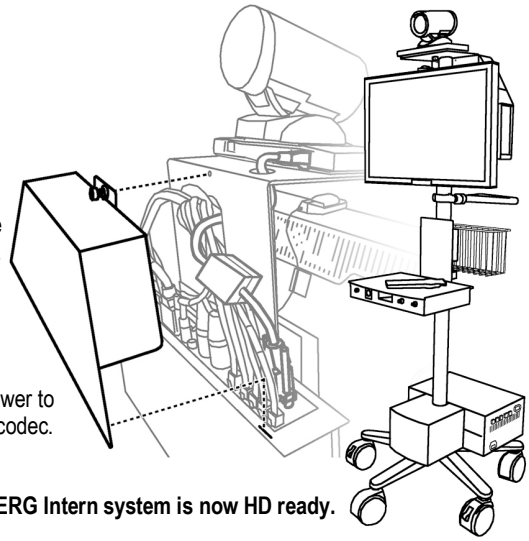

Install cable cover plate.

Turn on the power to the Edge codec.

Your TANDBERG Intern system is now HD ready.